D THIS DRAWING AND DESIGN HEREON CONSTITUTES A PROPRIETARY DESIGN OF PACKARD ELECTRIC DIVISION AND IS NOT TO BE DUPLICATED OR REPRODUCED WITHOUT AUTHORITY OF PACKARD ELECTRIC DIVISION.

DO NOT SCALE

PART NO. 1200 4552

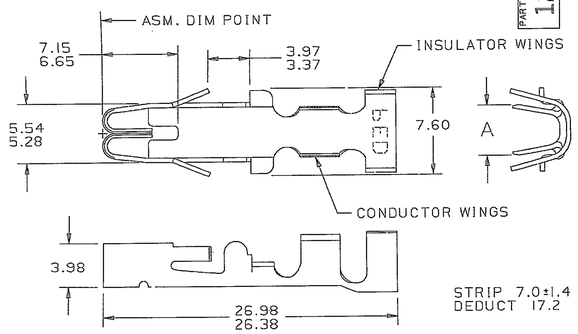

TYPE 1

PART NO. 1200 4552

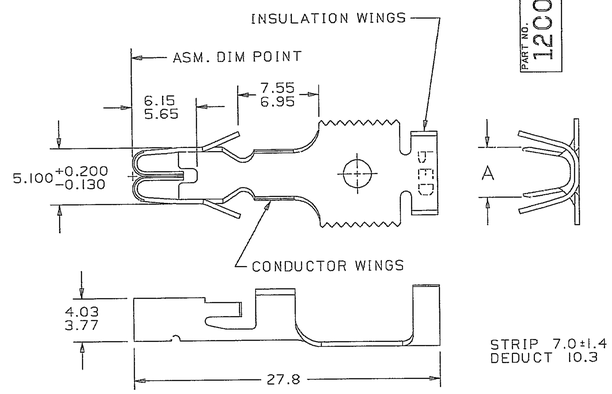

TYPE 2

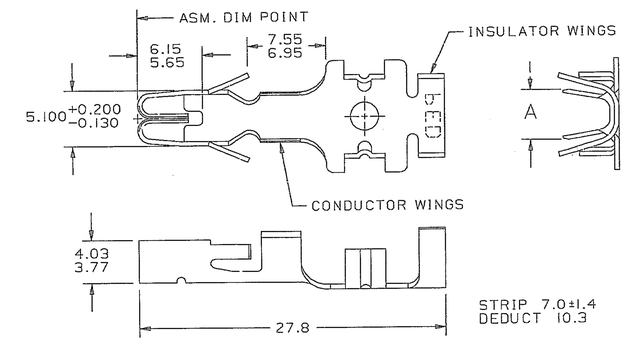

TYPE 3

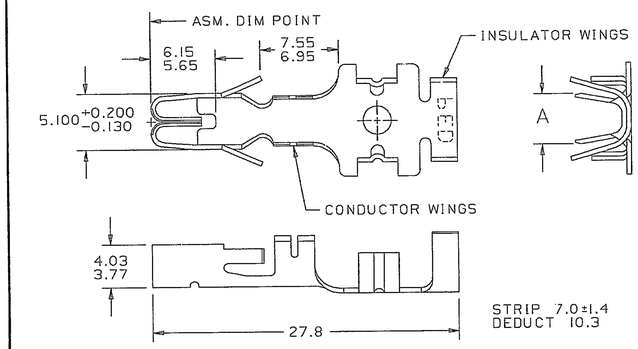

TYPE 4

DATE	SYM	REVISION RECORD	AUTH	DR	CK
11SE89	—	CLEARED REVISION COLUMN –			
		12089950, 12089951, 12089952 &			
		12089953 – REVISED NOTE –			
		NO REVISION UPDATE REQUIRED	129804	FH	FH
27SE89	—	ALL ACTIVE TYPE #1 PARTS –			
		SLOT DIM. 7.15/6.65 WAS 6.15/5.65:			
		REVISION LEVELS ADVANCED:			
		12015373 & 12089953 BROUGHT			
		INTO AGREEMENT WITH DETAIL.	129180	AP	AP
05DE89	—	12078031, 12078032, 12078033,			
		12078136, 12078137 & 12078138:			
		REV. LEVEL ADVANCED TO "B"	131198	AP	AP
20DE89	—	ALL ACTIVE TYPE #1 PARTS –			
		DIM. 3.98 WAS 4.22/3.96:			
		NO REV. UPDATE REQ'D.	132023	AP	AP
21JN91	—	ALL ACTIVE PARTS — REVISED			
		TOLERANCE ±0.2 WAS ±0.4 —			
		NO REV UPDATE REQ'D	143205	JK	HH
24AU04	—	CORRECTED PREVIOUS DRAFTING	258153	BYP	BYP
		ERRORS ON CN251516			
05JA07	—	12052443 - UPDATED REVISION LEVEL	400027	EFS	EVV
22AU08	—	12004560-02, 12078031 & 12078033 -			
		OBSOLETE; 12078032 & 12020336 -			
		OBSOLETE AND REPLACED BY 12078137			
		& 12089952	405838	JTZ	FKV
07OC10	—	**ALL ACTIVE PARTS - DIM A ±0.4 WAS**	**412170**	MAB	LHT
		DIM A ±0.2			
10JN15	—	**12048281 MAKE OBSOLETE**	**429653**	RCE	LES
01SE16	—	ALL ACTIVE PARTS - UPDATED PDM			
		ATTRIBUTES	434038	JVR	ERG

PART NO.	REV.	STATUS	MATERIAL	PART NO.	REV.	STATUS	TYPE	SIZE (MM²)	DIA.	I.D.	A ±0.4
				12010636▲	F2		■1	2.0–1.0	3.95	15	4.4
12089823	B2		0.406 THK SAE CA 260 BRASS				■1	0.8–0.5	3.10	19	3.2
			0.406 THK SAE CA 260 COPPER	12078138	B2		4	2.0–1.0	3.95	15	3.3
			0.406 THK SAE CA 260 COPPER	12078136	B2		4	5.0–3.0	5.10	11	4.6
~~12078033~~	B1	OBSOLETE	0.406 THK SAE CA 260 BRASS				4	3.0	3.20	12	3.3
~~12078032~~	B1	OBSOLETE	0.406 THK SAE CA 260 BRASS	12078137▲	B2		4	2.0–1.0	3.95	15	3.3
~~12078031~~	B1	OBSOLETE	0.406 THK SAE CA 260 BRASS				4	5.0–3.0	5.10	11	4.6
~~12066447~~	A	OBSOLETE	0.406 THK SAE CA 260 BRASS				■2	0.8–0.5	3.10	19	3.8
12052443	B2		0.406 THK SAE CA 260 BRASS				■2	3.0	3.10	12	4.6
12052209	B2		0.406 THK SAE CA 260 BRASS				■1	3.0	3.10	12	4.6
12052208	B2		0.406 THK SAE CA 260 BRASS				■1	1.0	2.25	16	4.4
			0.406 THK SAE CA 195 COPPER	~~12048293~~●	A	OBSOLETE	■2	0.8–0.5	3.10	19	3.8
			0.406 THK SAE CA 195 COPPER	12048291●	A2		■2	2.0–1.0	3.95	15	4.4
			0.406 THK SAE CA 195 COPPER	12048290●	A2		■2	5.0–3.0	5.10	11	4.6
			0.406 THK SAE CA 195 COPPER	~~12048289~~●	A	OBSOLETE	■2	TWO 2.0–1.0	3.10	215	6.0
			0.406 THK SAE CA 195 COPPER	~~12048281~~●	**B2**	**OBSOLETE**	■1	TWO 0.8–0.5	2.55	219	4.7
			0.406 THK SAE CA 195 COPPER	~~12048280~~●	A	OBSOLETE	■1	TWO 2.0–1.0	3.10	215	6.0
			0.406 THK SAE CA 195 COPPER	12048279●	B2		■1	0.8–0.5	3.10	19	3.8
			0.406 THK SAE CA 195 COPPER	12048278●	B2		■1	2.0–1.0	3.95	15	4.4
			0.406 THK SAE CA 195 COPPER	12048277●	B2		■1	5.0–3.0	5.10	11	4.6
12020400	E2		0.406 THK SAE CA 260 BRASS	12089953	B2		■1	5.0–3.0	5.10	11	4.6
12020338	D2		0.406 THK SAE CA 260 BRASS	12010637▲	E2		■2	2.0–1.0	3.95	15	4.4
12020337	D2		0.406 THK SAE CA 260 BRASS				■2	5.0–3.0	5.10	11	4.6
~~12020336~~	E1	OBSOLETE	0.406 THK SAE CA 260 BRASS	12089952	B2		■1	TWO 0.8–0.5	2.55	219	4.7
12020335	E2		0.406 THK SAE CA 260 BRASS				■1	TWO 2.0–1.0	3.10	215	6.0
12020334	E2		0.406 THK SAE CA 260 BRASS	12089951	B2		■1	0.8–0.5	3.10	19	3.8
12020321	E2		0.406 THK SAE CA 260 BRASS	12089950	B2		■1	2.0–1.0	3.95	15	4.4
12015373	E2		0.406 THK SAE CA 260 BRASS				■1	0.35–0.22	1.86	23	2.2
~~12004582~~	A	OBSOLETE	0.406 THK SAE CA 260 BRASS				3	TWO 0.8–0.5	2.55	219	4.7
~~12004581~~	A	OBSOLETE	0.406 THK SAE CA 260 BRASS				3	TWO 2.0–1.0	3.10	215	6.0
~~12004580~~	A	OBSOLETE	0.406 THK SAE CA 260 BRASS				3	0.8–0.5	3.10	19	3.1
~~12004579~~	A	OBSOLETE	0.406 THK SAE CA 260 BRASS				3	2.0–1.0	3.95	15	3.7
~~12004578~~	A	OBSOLETE	0.406 THK SAE CA 260 BRASS				3	5.0–3.0	5.10	11	4.6
~~12004562~~	D1	OBSOLETE	0.406 THK SAE CA 260 BRASS				2	TWO 2.0–1.0	3.10	215	6.0
~~12004561~~	D1	OBSOLETE	0.406 THK SAE CA 260 BRASS				2	TWO 0.8–0.5	2.55	219	4.7
~~12004560~~	E1	OBSOLETE	0.406 THK SAE CA 260 BRASS				2	0.8–0.5	3.10	19	3.8
~~12004559~~	E	OBSOLETE	0.406 THK SAE CA 260 BRASS				2	2.0–1.0	3.95	15	4.4
~~12004558~~	D	OBSOLETE	0.406 THK SAE CA 260 BRASS				2	5.0–3.0	5.10	11	4.6
~~12004557~~	E	OBSOLETE	0.406 THK SAE CA 260 BRASS				1	TWO 0.8–0.5	2.55	219	4.7
~~12004556~~	E	OBSOLETE	0.406 THK SAE CA 260 BRASS				1	TWO 2.0–1.0	3.10	215	6.0
~~12004555~~	F	OBSOLETE	0.406 THK SAE CA 260 BRASS				1	0.8–0.5	3.10	19	3.8
~~12004554~~	F	OBSOLETE	0.406 THK SAE CA 260 BRASS				1	2.0–1.0	3.95	15	4.4
~~12004553~~	E	OBSOLETE	0.406 THK SAE CA 260 BRASS				1	5.0–3.0	5.10	11	4.6
UNPLATED				PLATED				CABLE			

CABLE I.D. NUMBER (AS SPECIFIED IN CHART) IS LOCATED ON UNDERSIDE OF EACH TERMINAL.

■ INDICATES SERRATIONS IN CONDUCTOR WINGS.

▲ INDICATES MATERIAL (C260 ALLOY) IS TIN PLATED OVER COPPER PLATE.

● INDICATES MATERIAL (C195 ALLOY) IS SILVER PLATED OVER NICKEL PLATE.

INDICATES MATERIAL (C260 ALLOY) IS SILVER PLATED OVER NICKEL PLATE.

NOTE — CONTACT PACKARD ELECTRIC SALES DEPARTMENT CONCERNING CURRENT PRODUCT AVAILABILITY.

As of 06JL90 this drawing is no longer being maintained on computer vision.

C05D1974

CAD CAM (JWP)

METRIC
DIMENSIONS ARE IN MILLIMETERS UNLESS OTHERWISE SPECIFIED

THIRD ANGLE PROJECTION

CODE NO. 6900

QC

TOLERANCE UNLESS OTHERWISE SPECIFIED
DECIMAL: ONE PLACE ±0.3, TWO PLACE ±0.15
ANGULAR ±2°

DWG. DATE 07JN78 | SCALE NONE | DR.

CD.X.TERM.12004552.00.01 | CK. R. SEBRELL | DATE 03AU84

REFERENCE NO. 12004552 "D" SIZE SHT. #1, #2, & #6 | APPR. | DATE

APPR. R.D. KEARNS | DATE 04OC84

MATERIAL SPEC. SEE CHART

NAME TERM F PAC/ON III

PART NO. 1200 4552 | SIZE D

OUTLINE DRAWING SHEET 1 OF 3

PACKARD ELECTRIC

PACKARD ELECTRIC DIVISION
GENERAL MOTORS CORPORATION
WARREN, OHIO